PACIFIC BLOWERS

PB-402/1

Single Phase

RING BLOWER
VACUUM & PRESSURE

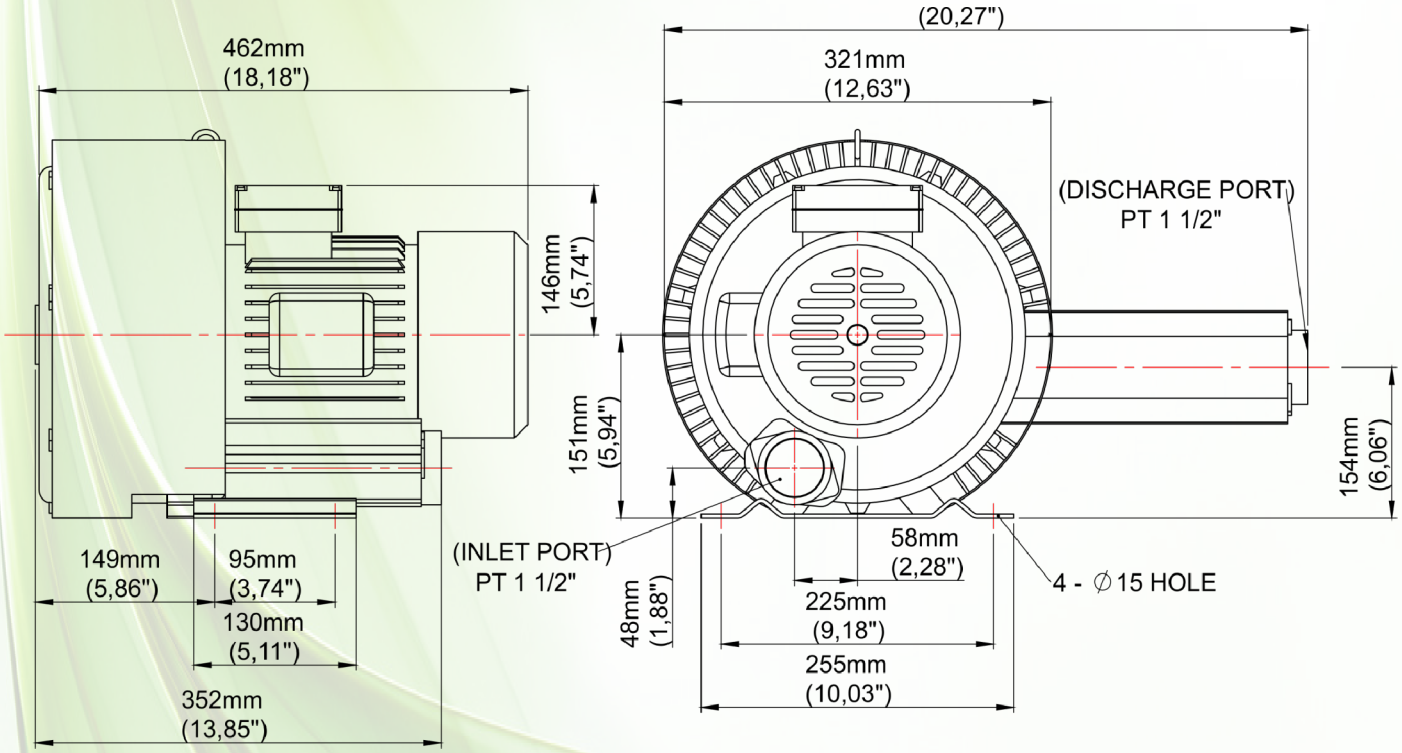

Third Angle

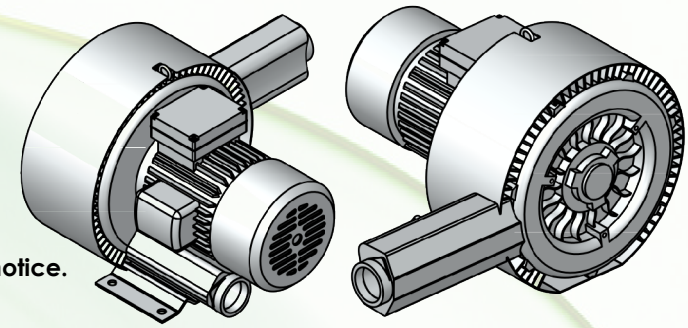

*** The allowable tolerance of dimension is ± 5mm**
***The dimension can be changed for improvement without notice.**

www.pacificblowers.com - Call Us: (305) 718-8895 - Fax: (305) 722-7387 - info@pacificblowers.com

ADVANTAGES

* Low noise 75dB
* Continuous, low-maintenance operation
* Saves space and electricity
* Trouble-free installation
* Easy replacement of parts
* Outboard bearings yielding longer life
* Dual voltage 110/230 V

PRODUCT OPTIONS

* 1-1/2” Relief Valve (recommended)
* Inlet Filter (recommended)
* Check Valve (recommended)
* Silencer (recommended)
* Liquid filled gauge (recommended)
* Enclosed motor starter (recommended)
* Filter motor gauge (recommended)
* Belt-driven bare shaft blowers are available upon request (Special Order)
* Explosion proof motors available upon request (Special Order)
[Class 2/Groups E,F,G/Division 1 Certified]

Double Stage Regenerative Blowers / 1 Phase (110 / 220 V) - 60 Hz

Phase	Motor (HP)	Motor (Kw)	Current (A) 110 / 220 V	Flow (cfm)	Flow (m3/min)	Flow (m3/hr)	Max Pressure (in H2O)	Max Pressure (mmAq)	Max Pressure (psig)	Max Pressure (mbar)	Max Vacuum (in H2O)	Max Vacuum (mmAq)	Max Vacuum (psig)	Max Vacuum (mbar)	Sound Level (dB/A)	Weight (lbs.)	Weight (Kg)	Diameter (INLET/OUTLET) inch
1	3,0	2,20	31.0/ 15.5	113	3,2	192	138	3500	4,98	343	102	2600	3,69	255	75	85	39	1 1/2

Double Stage Regenerative Blowers / 1 Phase (110 / 220 V) - 50 Hz

Phase	Motor (HP)	Motor (Kw)	Current (A) 110 / 220 V	Flow (cfm)	Flow (m3/min)	Flow (m3/hr)	Max Pressure (in H2O)	Max Pressure (mmAq)	Max Pressure (psig)	Max Pressure (mbar)	Max Vacuum (in H2O)	Max Vacuum (mmAq)	Max Vacuum (psig)	Max Vacuum (mbar)	Sound Level (dB/A)	Weight (lbs.)	Weight (Kg)	Diameter (INLET/OUTLET) inch
1	2,50	1,83	25.6 / 12.8	88	2,5	150	138	3500	4,97	343	98	2500	3,55	245	75	85	39	1 1/2

* The performances above were measured under conditions of air temperature 20ºC and atmospheric pressure 1,013 mbar
* The allowable tolerance of the perfomance value is ± 10%
* The sound level was measured at a distance of 1.5m with the fully open inlet and outlet ports

PERFORMANCE CURVES

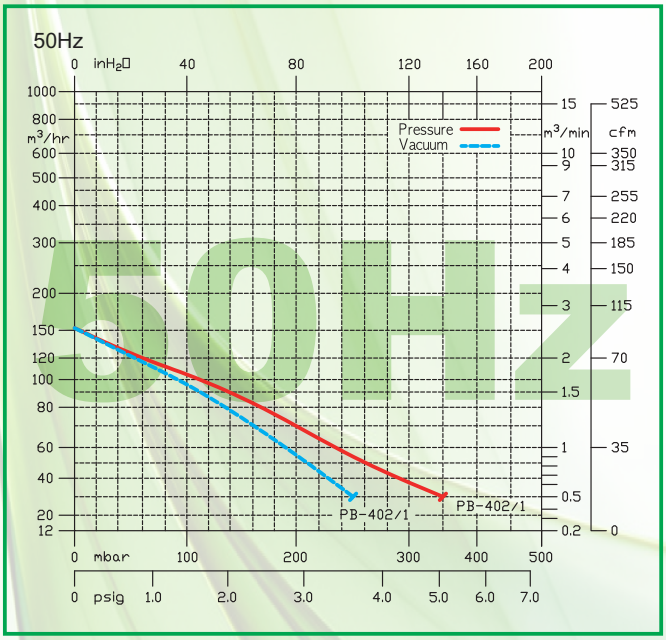

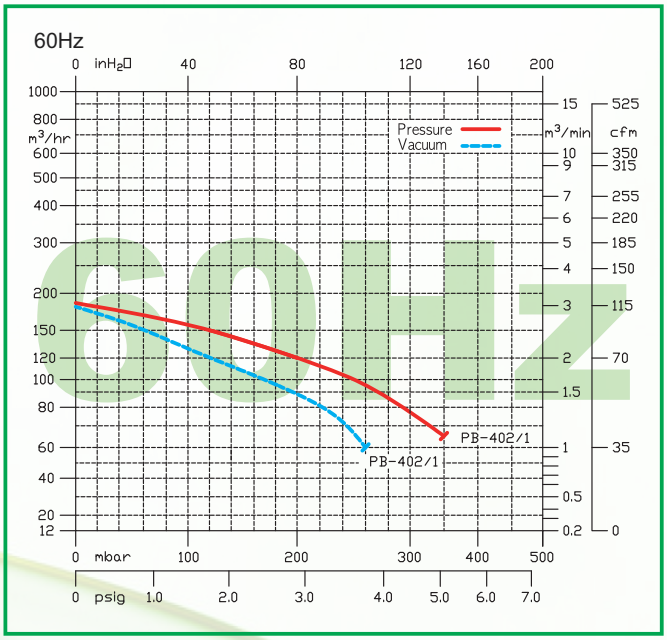

* The continuous operation can be made at a point below the curve, however, the continuous operation nearby the rated pressure point may cause a motor breakdown. In the case of continuous operation close to the rated pressure, it is strongly recommended to use the pressurerelief valve.
* The allowable tolerance of the performance value is ± 10%

www.pacificblowers.com - Call Us: (305) 718-8895 - Fax: (305) 722-7387 - info@pacificblowers.com

All Pacific blowers are available in unassembled kits for either pressure or vacuum applications. These kits include:

Vacuum
* Silencer
* Inlet Filter
* Relief Valve
* Vacuum Gauge
* Flow Meter (optional)

Pressure
* Relief Valve
* Check Valve
* Pressure Gauge
* Inlet Filter
* Flow Meter (optional)
* Silencer (optional)

KVPB-402/1 - Vacuum Kit Drawing

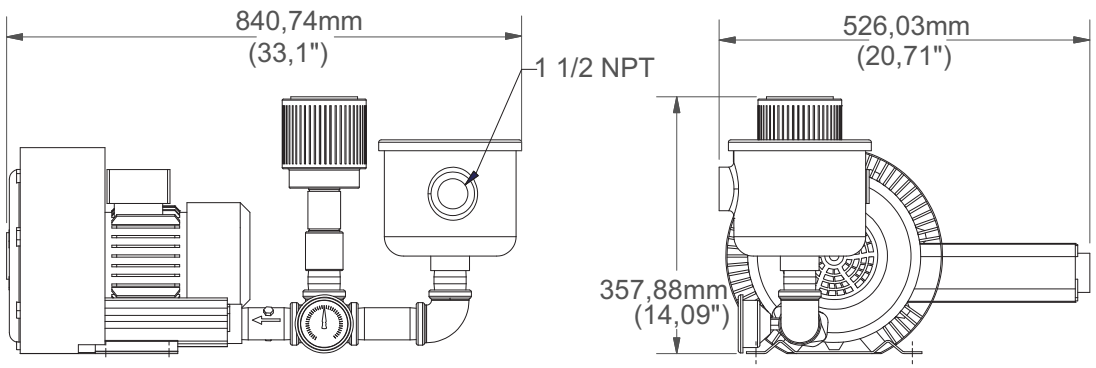

Kit Vacuum Pump 2" NPT	KVPB-402/1

KPPB-402/1 - Pressure Kit Drawing

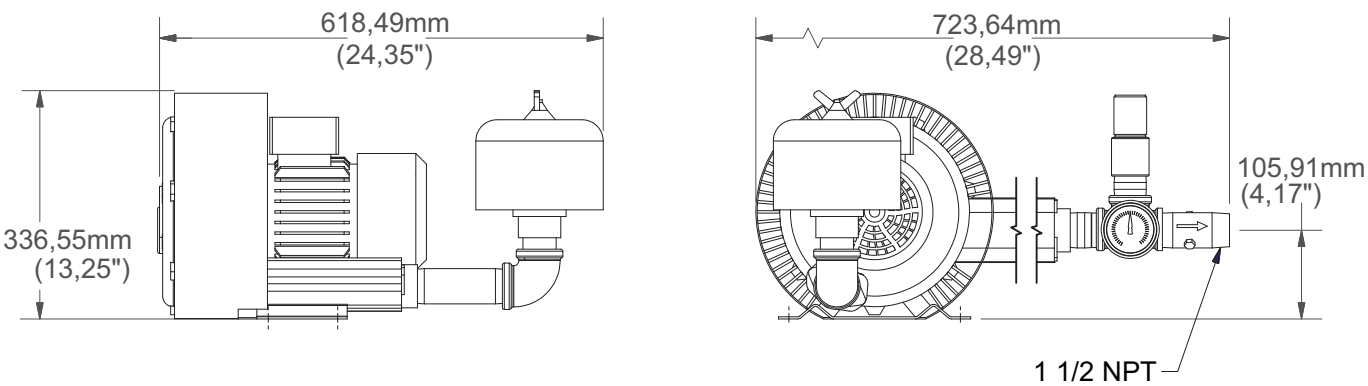

Kit Pressure Pump 2" NPT	KPPB-402/1